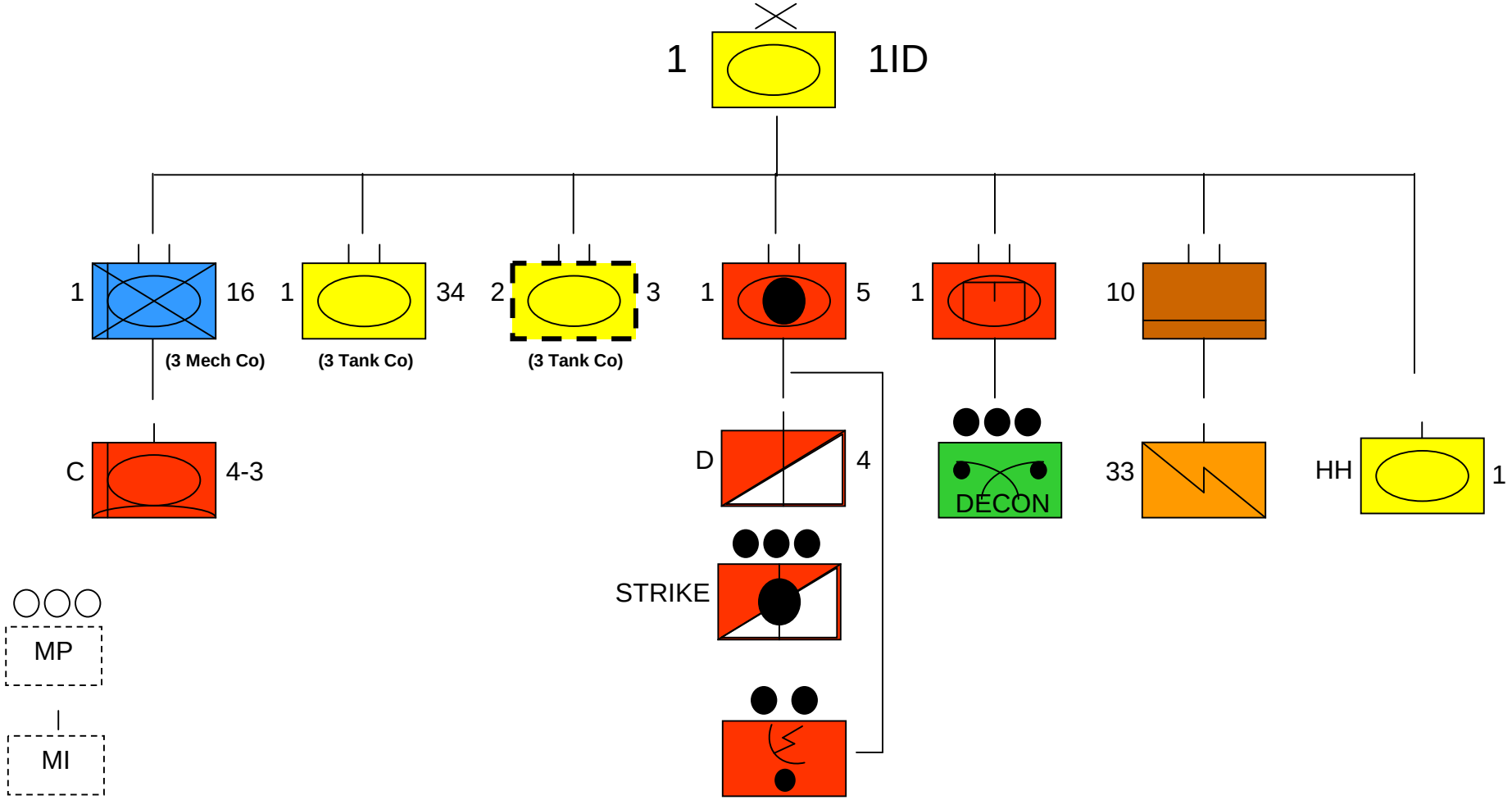
1
1ID
1
16
(3 Mech Co)
1
34
(3 Tank Co)
2
3
(3 Tank Co)
1
5
1
10
C
4-3
D
4
STRIKE
DECON
33
HH
1
MP
MI